Research Square

Preprints are preliminary reports that have not undergone peer review. They should not be considered conclusive, used to inform clinical practice, or referenced by the media as validated information.

GFRG Panels in Construction: A Potential Solution to Material Limitation

Snehal Ashok Salvi (snehalsalvi099@gmail.com)
Dr Babasaheb Ambedkar Technological University https://orcid.org/0000-0002-3778-1993

Vishal Jadhav
Dr Babasaheb Ambedkar Technological University

Nandini Pate
Dr Babasaheb Ambedkar Technological University

Vaishali Kamade
Dr Babasaheb Ambedkar Technological University

Janhavi Deshpande
Dr Babasaheb Ambedkar Technological University

Aniruddha Chavan
Dr Babasaheb Ambedkar Technological University

Research Papers

Keywords: Hollow panels, Light weight, Low cost, Prefabricated, Green Product

Posted Date: February 9th, 2021

DOI: https://doi.org/10.21203/rs.3.rs-166363/v1

License: This work is licensed under a Creative Commons Attribution 4.0 International License.
Read Full License

Abstract

There is a huge growing requirement of building materials in India due to the existing housing shortage of 24.7 million units mainly for the low-income groups in urban India. Use of rapid techniques for timely delivery of construction projects by adopting fast methodologies and alternate building materials is necessary in India, given the tremendous housing shortage. Further, the construction has to be affordable and also sustainable. The construction technique proposed in this project, by making use of Glass Fiber Reinforced Gypsum (GFRG) panels (with reinforced concrete infilled cavities) to build homes, promises such a solution for rapid affordable mass housing in India. GFRG building system is a rapid building technology composed of prefabricated wall panel load bearing system. GFRG is also an eco-friendly building material which can be manufactured out of either natural or industrial gypsum.

Introduction

Glass fiber reinforced gypsum (GFRG) panel is a green product. They are made with modified gypsum plaster and reinforced with cut glass fibers. Its main application is in the construction of walls, it can also be used in floor and roof slabs in combination with the reinforced concrete. The panels contain cavities that maybe filled with concrete and reinforced with steel bars to impart additional strength and provide ductility. These panels can be used as alternative building material to replace bricks or concrete blocks. Various researches have been conducted by IIT Madras and they have developed a structural design manual for conducting the design of buildings made with GFRG. Phosphogypsum is a byproduct of fertilizer industries. Apart from being used as a fertilizer, building material and soil stabilization agent, about 85% of phosphogypsum is dumped in the vicinity of phosphate factories, requiring large disposal areas. The effective disposal of phosphogypsum is done by the manufacture of Glass Fiber Reinforced Gypsum (GFRG) panel, also known as Rapid wall. These can be used as load bearing as well as non-load bearing structures.

Glass fiber reinforced gypsum (GFRG) wall, a new composite wall product known as Rapid-wall/Gypcrete in the industry, is made essentially of gypsum plaster, reinforced with chopped glass fibers. The glass fibers about 300 - 350 mm long are randomly distributed inside the panel skins and ribs in the manufacturing process. The fiber content is 0.8 kg/m2. The 120 mm thick panels are hollow and can be filled with in-situ plain or reinforced concrete to increase the strength. A typical cross section of the panel is illustrated in Fig.1

Background

The word GFRG signifies Glass Fiber Reinforced Gypsum which is also recognized as Rapid Walls. It is made up of high strength resistant glass fibers bonded with high density gypsum cement. It was invented in 1990 by GFRG Building system Australia. GFRG panels have been approved as a green material by the United Nations Framework Convention on Climate Change (UNFCC) under Clean Development

Mechanism (CDM). Now, this method of construction is broadly accepted by a few Asian nations such as India, Saudi Arabia, Oman, and China.

Literature Review

[1] **Maganti Janardhana** studied about behavior of Glass Fiber Reinforced Gypsum wall panels. In a high seismic intensity zone, resistance of buildings to earthquakes is often ensured by adopting structural systems where seismic actions are assigned to structural walls (shear walls), designed for horizontal forces and gravity loads while columns and beams are designed only for gravity loads.

[2] **A Meher Prasad** focused on new building panel product, made of gypsum plaster reinforced with glass fibres. It is also known as Rapid wall in the industry. The panel contains cavities that may be filled with concrete and reinforced with steel bars to impart additional strength and provide ductility.

[3] **Basil P Alias, Biji K Eldhose,Sarath Rajan,Thasneem Hussain.** He found that GFRG Panels are light weight building material which can be used as walls and roof slab. Phospho-Gypsum, which is bi-product of fertilizer industry, can be effectively used in the production of panel.

[4] **VPS Nihar Nanyam, Riddha Basu, Anil Sawhney, J.K Prasad-** This paper highlights the evaluation framework consisting of mandatory attributes and preferred attributes, based on which the emerging housing technologies are selected for adoption. Glass fibre reinforced gypsum (GFRG) panel more popularly known as Rapid-wall is a building panel made up of calcined gypsum plaster and reinforced with glass fibre.

[5] **K.Kalaipriya, R.Jayanthi** focused on comparison of conventional construction with wall panel system building construction is the process of adding structure to real property or construction of buildings. Main application is in the construction of walls, it can also be used in floor and roof slabs in combination with reinforced concrete.

[6] **KadamSagar.P, DaradeMilind** compared about rapid wall panel construction over conventional construction with respect to cost and time of construction. Rapid wall panels being low cost building materials, and easy to install, fit exactly the current void or demand for houses in India.

[7] **SubhanAlisha** discovered gypsum is a tough material, and it is as of now vigorously being used as parcel dividers. Specialists foresee that a building made of GFRG boards can have a life expectancy of 60 years. A GFRG building does not require the United Nations Framework Convention on Climate Change (UNFCCC) has endorsed beams, columns, and the material as a green building material.

Current Practices

Conventional construction is the traditional method of construction using common techniques and materials. The traditional method of construction has been the accepted norm for a long time. By its very

definition, the word traditional means conventional, customary and established. Modular construction, on the other hand, revolutionizes everything, from cutting time to changing attitudes. In traditional construction foundations are laid, walls are built, roofs are added and then the interior of the building begins to be created. Finally, before being handed over to the customer, the snag-list is drawn up and tackled – all those small issues and tasks that need addressing. Then, and only then, is the building officially complete. There are pros as well as cons of traditional method of construction. Both traditional and modular construction begins in the same way. Planning, design, approvals, site preparation and development are all required. But, from this point onwards, everything changes.

LIMITATIONS TO CURRENT PRACTICES

- Linear construction requires every step to be completed before the next can begin. Because every step is dependent on another.
- Weather damage and inconsistent labor yield can affect quality.
- Since all construction occurs on site the schedule is dependent on weather condition. Dry weather can increase the amount of dust on job site which can jam or clog the machinery.
- One must be sure about the contingency that the contractor has in place in-case it gets too cold or is rainy for an extended period of time.
- The construction process is more involved and can require hiring higher skilled designers and builders. Because a little mistake in the construction process can lead to damage to the whole structure.
- The cost of labor and materials are more.
- The time require to construct a building is more in the traditional method of construction.
- After the long time use it may be leads to cracks to the walls and roofs.
-

GFRG LOAD BEARING PANELS AS A SOLUTION

- GFRG panelpossesses high flexural strength, shearing strength, compressive strength, and flexibility. It has a very high level of resistance to fire, water, heat, corrosion, rot, and termites.
- The construction using GFRG panels can be up to 50% quicker than traditional construction.
- As the major part of construction are handled within a factory, weather conditions are often irrelevant during the majority of the project.
- GFRG panels has an excellent load-bearing capacity and also can resists earthquakes.
- It is an ecofriendly option and can reduce the impact of construction on environment.
- It is comparatively easy to construct and also saves time as compared to the standard construction process.
- The construction using GFRG panels is comparatively low in cost.
- The use of this material can decrease the structural weight of construction.

- GFRG has no corrosive action on glass fiber. So there will be no cracks and no distortion after long time use.
- GFRG panels are easy for installation therefore no need of high skilled labors.
- The mechanical properties of GFRG panels, for both empty panels and panels filled with M20 concrete in all cavities are given in Table I, based on tests conducted.

Table I: GFRG Panels: Mechanical properties

(Source: www.slideshare.com)

Sr. No.	Mechanical Property	Characteristic Value
i	Unit weight	0.43 [KN/m^2]
ii	Uni-axial compressive strength	160 [KN/m] (empty panel) 131 [KN/m](filled panel)
iii	Ultimate shear strength	21.6 [KN/m] (empty panel) 61.0 [KN/m](filled panel)
iv	Water absorption	1% in 1 hour 3.85% in 24 hours
v	Fire resistance	2.30-hour rating (empty panel) 4.0-hour rating (filled panel) - withstand 900-1000°C
vi	Coe. Of thermal expansion	10×10^{-6} [mm/mm/°C]

SCOPE OF WORK

- The foundation of building is to be constructed similar to that of conventional building with random rubble masonry.
- Features of building, estimation of cost and schedule is done on the basis of construction procedures commonly used by engineers.

- The effective utilization of phosphogypsum is done by manufacture of GFRG panel, also known as Rapid Walls.

Summary

This paper has introduced GFRG panels and its structural performance. The accurate calculations of the tests were not possible due to the relative movement between the concrete cores and GFRG wall surface. Based on the experimental results a design procedure for the building system has been proposed. Thus, rapid wall construction is more economical. Rapid wall Panel provides a new method of building construction in fast track. Using rapid wall construction, we can reduce man power, cost and time of construction. The use of natural resources which are now day not easily available like river sand, water and agricultural land is reduced. It reduces adverse effects on environment. The building constructed using RW panel comes under Green building categories as after constructing it energy requirement for heat insulation, sound insulation, humidity and Temperature inside is less than conventional building. It is very effective technology to beat the current rising cost of construction. And the most important, this new technology is having potential to provide shelter to the “Homeless India.”

References

Devdas Menon “Rapid Affordable Mass Housing using Glass Fibre Reinforced Gypsum (GFRG) Panels” International Journal of Scientific & Engineering (2014)

Maganti Janardhana, Meher Prasad A. and Devdas Menon “Studies on the Behavior of Glass Fiber Reinforced Gypsum Wall Panels” Indian Institute of Technology Madras (2004)

KadamSagar.P, DaradeMilind.M “Comparing Rapid Wall Panel Construction over Conventional Construction with Respect to Cost and Time of Construction” International Journal on Recent and Innovation Trends in Computing and communication (2016)

Devdas Menon, Meher Prasad “Development of Building Systems using Glass Fibre Reinforced Gypsum (GFRG) Panels” The master builder (2013)

Eldhose M Manjummekudiyil, Basil P Alias, Biji K Eldhose, SarathRajan, ThasneemHussain “Study of GFRG panel and its Strengthening” International Journal of Civil and Structural Engineering Research (2015)

SubhanAlisha, Sajja.Neeraja, Sk.Akber, G. SaiMan “Low Cost Housing by Using GFRG Panels” International Journal of Scientific Research in Science, Engineering and Technology (2016)

Wu Y.-F., Elsevier (Science Direct), “The structural behavior and design methodology for a new building system consisting of glass fiber reinforced gypsum panels” (2009)

Kalaipriya K, Jayanthi R, “Comparative Study on Estimation of Wall Panel System with Conventional Building Works in Construction Industry” International Journal of Science and Engineering Research (IJ0SER) (2015)

Aishwary Shukla, Mohd. Afaque Khan, Abhishek Kumar “A Review of Research on Building System Using Glass Fiber Reinforced Gypsum Wall Panels” International Research Journal of Engineering and Technology (IRJET) (2016)

Mohamed Said, Meselhy Elsaeed “Cost Model for using Glass Fibre Reinforced Gypsum System (GFRG)” International Journal of Development and Economic Sustainability (2016)

NithyaNandan A, Renjith R “Experimental Study on Glass Fiber Reinforced Gypsum (GFRG) Panels Filled with Alternate Concrete Mix Using Shredded Thermocol and Phosphogypsum” International Journal of Scientific & Engineering Research (2016)

Sajja. Neeraja, Sk. Akber, G. Sai Manoj,” Low Cost Housing by Using GFRG Panels” (2016)

Arun Deshwali, Dr. Raghvendra Singh, “Seismic Evaluation of GFRG Panel and Brick Infill Step-Back Set-Back and Step-Back Building” (2017)

Kuldeep Kumar “Critical Reviews of use of Glass Fiber Reinforced Gypsum panels in Housing in India” (2020)

Figures

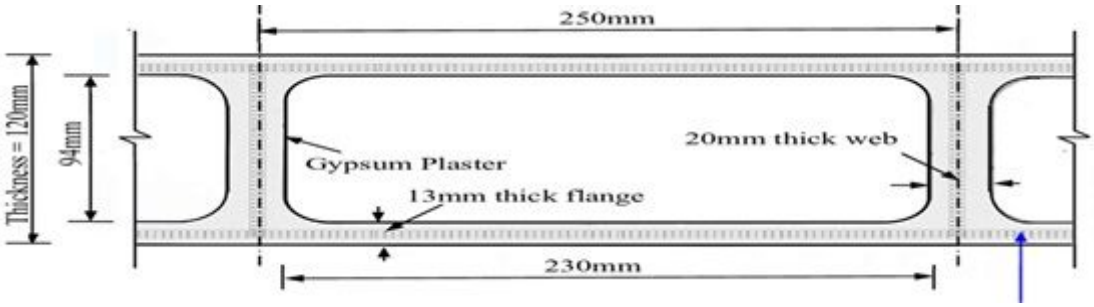

Figure 1

Cross section of GFRG panel (Source: www.researchgate.com)